HITU DISPLAY

PRODUCT SPECIFICATION

Indoor Full-Color LED Display Module

P3-32S-2020-H-3840

Refresh rate: 3840 Hz | H Series

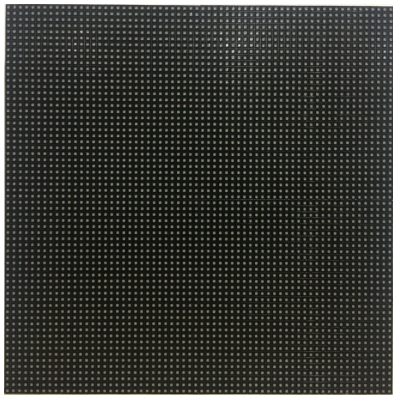

PRODUCT MODULE

Shenzhen Hantu Jiashi Technology Co., Ltd.

No. 40, Huaning Road, Dalang Subdistrict, Longhua District, Shenzhen, China

Website: https://hitudisplay.com/

CONTENTS

01	Scope and safety guidance	3
02	Product overview and key benefits	4
03	Product configuration	5
04	Display and system specifications	6
05	Module specifications and interface	7
06	Mechanical installation guidance	8
07	Electrical installation guidance	9
08	Inspection, acceptance and contact	10

SCOPE AND SAFETY GUIDANCE

This specification defines the key optical, electrical, mechanical and environmental parameters for the product identified on the cover. Values are derived from the corresponding source specification and apply to standard indoor operating conditions.

DOCUMENT SCOPE	
Product	Indoor Full-Color LED Display Module
Model	P3-32S-2020-H-3840
Operating environment	Indoor
Refresh rate	3840 Hz
Signal interface	HUB75
Document language	English

1 ESD protection

Wear an antistatic wrist strap and use ESD-safe handling procedures when touching modules or connectors.

2 Power isolation

Disconnect AC input before wiring, servicing or replacing power and signal components.

3 Indoor use

Keep the display dry, ventilated and away from corrosive gas, conductive dust and direct heat sources.

Important: installation and commissioning must be performed by trained personnel. Confirm polarity, voltage, grounding and cable routing before energizing the screen.

PRODUCT OVERVIEW

MODULE FRONT

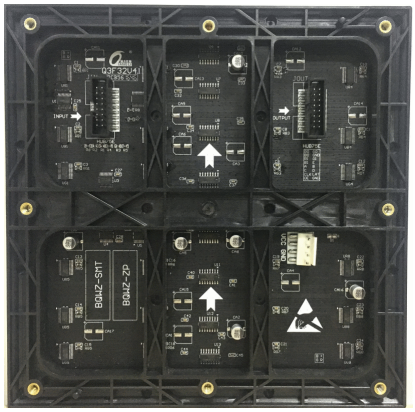

MODULE REAR

The indoor full-color module is designed for high-resolution commercial displays, control rooms, studios and other close-viewing applications.

PIXEL PITCH	BRIGHTNESS	REFRESH	MODULE
3 mm	≥450 cd/m2	3840 Hz	192 x 192 x 14 mm

Typical applications: broadcast and presentation spaces, conference rooms, retail environments, command centers, exhibitions and branded indoor installations.

PRODUCT CONFIGURATION

CABINET FRONT

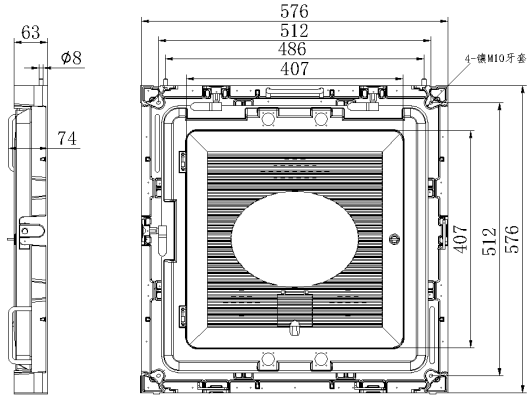

CABINET CONFIGURATION

RECOMMENDED CABINET CONFIGURATION

Recommended cabinet size	576 x 576 x 77 mm
Cabinet resolution	192 x 192=36864 Dots
Cabinet area	0.332 m2
Cabinet weight	9.3 kg±0.05
Cabinet maximum power	≤174 W
Cabinet average power	≤58 W

Mechanical dimensions are nominal. Confirm the final cabinet, frame, curvature and mounting tolerance against approved project drawings before production or installation.

DISPLAY AND SYSTEM SPECIFICATIONS

OPTICAL AND SYSTEM PARAMETERS	
Pixel pitch	3 mm
Pixel density	111111 Dots/m2
Pixel configuration	1R1G1B
LED / packaging	2020
Brightness	≥450 cd/m2
Brightness uniformity	>0.95
Horizontal viewing angle	140±10 deg
Vertical viewing angle	130±10 deg
Recommended viewing distance	≥5.4m
Refresh rate	3840 Hz
Frame rate	≥60 fps
Grayscale	13 bits per RGB channel
Display colors	4.398 trillion colors
Operating temperature	-20 deg C-40 deg C
Operating humidity	10% RH to 65% RH
Application	Indoor

MODULE SPECIFICATIONS AND INTERFACE

MODULE ELECTRICAL AND MECHANICAL DATA	
Module dimensions	192 x 192 x 14 mm
Module weight	0.28 kg±0.01 kg
Module resolution	64 x 64=4096 Dots
Input voltage	4.2±0.1 V
Maximum current	≤4.3 A
Maximum module power	≤20 W
Drive method	1/32 constant-current drive
Signal interface	HUB75
Maximum power per m2	≤525 W/m2
Recommended distribution	≤792 W/m2

SIGNAL AND POWER FLOW

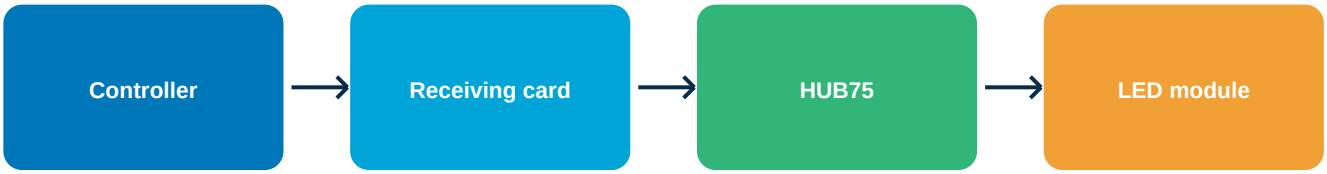

Use compatible controller hardware, receiving cards and mapping files. Verify ribbon-cable orientation, connector keying and the rated DC input before power-on.

MECHANICAL INSTALLATION GUIDANCE

REFERENCE MECHANICAL DRAWINGS

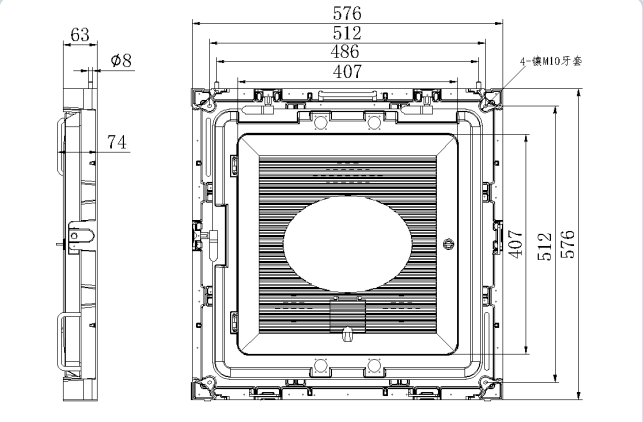

CABINET MOUNTING HOLES

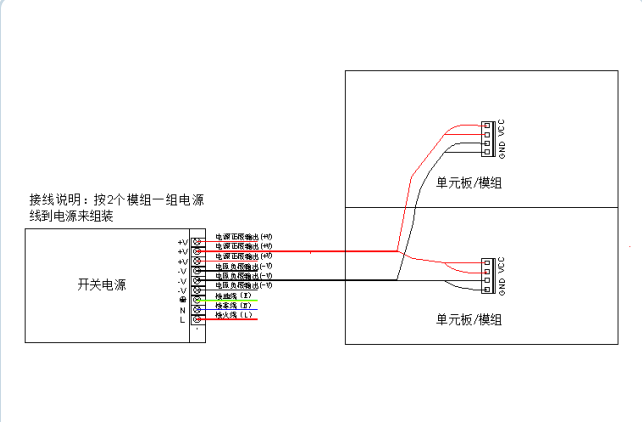

CABINET OUTLINE

1. **Structure**
   Confirm that the support frame is level, rigid, grounded and sized for the final screen load.

2. **Module fit**
   Keep seams uniform. Do not force or twist PCB assemblies during fastening or magnetic placement.

3. **Tolerance**
   Check flatness, alignment and service clearance after each cabinet or module row is installed.

4. **Ventilation**
   Maintain unobstructed airflow around power supplies, receiving cards and rear service space.

ELECTRICAL INSTALLATION GUIDANCE

SIGNAL CONNECTION / WIRING

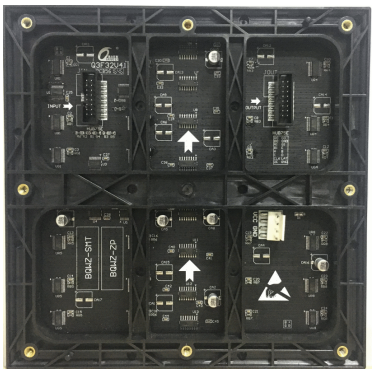

INSTALLATION REFERENCE

- Provide protective earth for every cabinet or structural section.
- Separate power and signal routes where practical; avoid tight cable bends.
- Verify DC polarity and voltage at the farthest module before connecting the full load.
- Perform the first power-on by section while monitoring current, temperature and image mapping.

INSPECTION, ACCEPTANCE AND CONTACT

RECOMMENDED ACCEPTANCE CHECKLIST

Visual inspection	No damaged LEDs, PCB deformation, loose connectors or abnormal surface contamination.
Power-on test	Stable start-up with no abnormal sound, odor, current surge or local overheating.
Image test	Red, green, blue, white and grayscale patterns display without persistent dead or uncontrolled pixels.
Uniformity	Brightness and color are visually consistent; calibration data is loaded when required.
Signal test	All mapped areas remain stable at the specified refresh rate and standard frame-rate input.
Installation check	Structure, grounding, cable retention, ventilation and service access are complete.

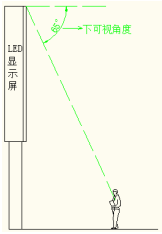

VERTICAL VIEWING ANGLE

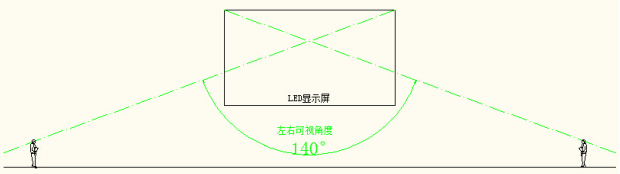

HORIZONTAL VIEWING ANGLE

SHENZHEN HANTU JIASHI TECHNOLOGY CO., LTD.

Address

No. 40 Huaning Road, Dalang Subdistrict, Longhua District, Shenzhen, China

Website: https://hitudisplay.com/

Document note

Specifications may be updated as products improve. Confirm project-specific drawings, controller configuration and commercial terms with Hitu Display before order release.